bürkert
FLUID CONTROL SYSTEMS

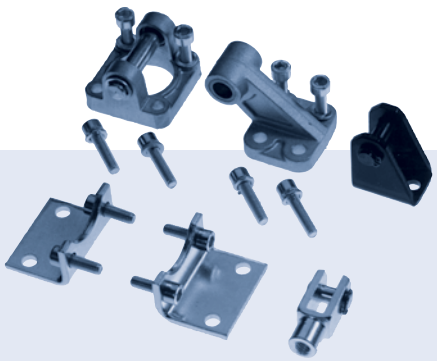

Fasteners for cylinder

- Numerous installation parts
- Simple installation

Fastener elements for cylinder, Ø 32 to 125 mm
- Head and floor flange fastening
- Fork fastening
- Counter bearing
- Bearing support, included rigid bearing
- Foot fastener
- Swivel tap fastener
- Self-aligning clutch
- Bearing support with joint bearing
- Joint head
- DIN 439 1014 hex nut
- Replacement gasket set

Fastener elements for cylinder, Ø 8 to 25 mm
- Foot fastener
- Flange fastener
- Bearing support
- Fastener and piston arm nuts
- Fork head
- Fork head with spherical bearing

Technical data	
Material	aluminium, aluminium die casting, Steel, plated

Other versions on request

DTS 1000111834 EN Version: - Status: RL (released | freigegeben | validé) printed: 18.02.2015

bürkert

Ordering charts Fastening elements for cylinder Ø 32 to 125 mm

- Head and floor flange fastening
- Clevis attachment
- Counter bearing
- Bearing block
- Foot fastener
- Trunnion mounting
- Self-aligning clutch
- Bearing block with joint bering
- Fork joint
- Fork head
- Hex nut
- Gasket replacement set

Head and floor flange fastening, aluminium for TZU002

Ø [mm]	B [mm]	B1 [mm]	B2 [mm]	B3 [mm]	B4 [mm]	Ø D4 [mm]	H5 + stroke [mm]	T [mm]	Item No.
32	64	80	50	10	32	7	130	16	780 303
40	72	90	55	10	36	9	145	20	780 304
50	90	110	65	12	45	9	155	25	780 305
63	100	120	75	12	50	9	170	25	780 306
80	126	153	95	16	63	12	190	30	780 307
100	150	1478	115	16	75	14	205	35	780 308
125	180	220	140	20	90	16	245	45	780 309

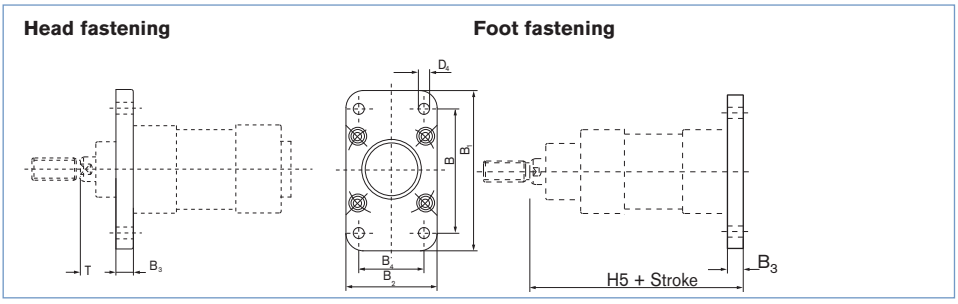

* consisting of 1 flange and 4 fastening screws

Clevis attachment, aluminium for TZU002

Ø [mm]	A [mm]	B [mm]	C [mm]	D [mm]	E [mm]	F [mm]	G (mm)	H 3 + stroke [mm]	R [mm]	S [mm]	T [mm]	Item no.
32	45	45	30	26	22	32.5	10	142	11	10	7	780 310
40	52	52	35	28	25	38	12	160	13	10	7	780 311
50	65	60	40	32	27	46.5	12	170	13	12	9	780 312
63	75	70	45	40	32	56.5	16	190	17	12	9	780 313
80	95	90	45	50	36	72	16	210	17	16	11	780 314
100	115	110	55	60	41	89	20	230	21	16	11	780 315
125	140	130	60	70	50	110	25	275	26	20	14	780 316

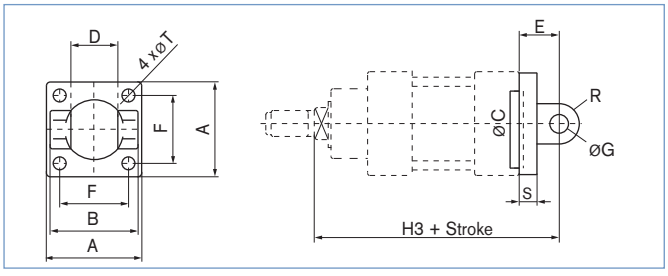

* consisting of 1 swivel flange,
1axle bolt with 2 locknuts,
4 fastening screws, and 4 spring nuts

DTS 1000111834 EN Version: - Status: RL (released | freigegeben | validé) printed: 18.02.2015

Ordering charts Fastening elements for cylinder Ø 32 to 125 mm

Counter bearing, aluminium for TZU002*

Ø [mm]	A [mm]	B [mm]	C [mm]	D [mm]	E [mm]	F [mm]	G (mm)	H [mm]	I [mm]	L [mm]	H 3 + stroke [mm]	Item no.
32	45	32.5	30	26	22	11	10	10	7	7	142	780 317
40	52	38.0	35	28	25	13	12	10	7	7	160	780 318
50	65	46.5	40	32	27	13	12	12	9	7	170	780 319
63	75	56.5	45	40	32	17	16	12	9	7	190	780 320
80	95	72.0	45	50	36	17	16	16	11	9	210	780 321
100	115	89.0	55	60	41	21	20	16	11	9	230	780 322
125	140	110	60	70	50	26	25	20	14	9	275	780 323

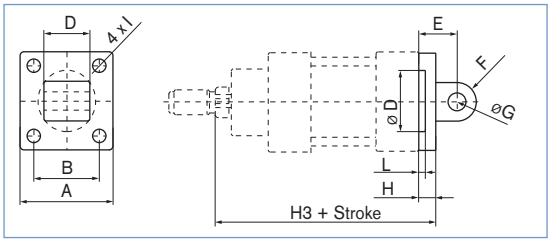

* consisting of 1 swivel flange, and 4 fastening screws

Bearing block - including rigid bearing, aluminium pressure cast for TZU002

Ø [mm]	A [mm]	B [mm]	C [mm]	D [mm]	E [mm]	F [mm]	G [mm]	H [mm]	I [mm]	L [mm]	M [mm]	N [mm]	Item no.
32	26	19	7	10	25	20	32	37	41	18	8	10	780 324
40	28	26	9	12	32	32	45	54	52	25	10	12	780 325
50	32	26	9	12	32	32	45	54	52	25	10	12	780 326
63	40	33	11	16	40	50	63	75	63	32	12	15	780 327
80	50	33	11	16	40	50	63	75	63	32	12	15	780 328
100	60	44	14	20	50	70	90	103	80	40	16	22	780 329
125	70	44	14	25	50	70	90	103	80	40	16	22	780 330

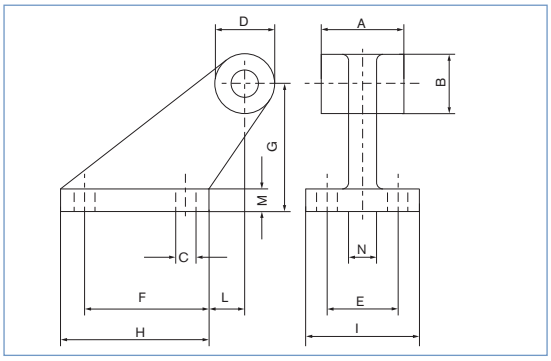

DTS 1000111834 EN Version: - Status: RL (released | freigegeben | validé) printed: 18.02.2015

Ordering charts Fastening elements for cylinder Ø 32 to 125 mm

Foot fastening, steel plated for TZU002*

Ø [mm]	AB (H13) [mm]	AH [mm]	AO [mm]	AT [mm]	AU (JS14) [mm]	E (JS14) [mm]	HB [mm]	P [mm]	R [mm]	TB ± 0.2 [mm]	TR (JS14) [mm]	UH [mm]	H1 [mm]	H2 [mm]	Item no.
32	7	32	35	4	24	15.75	7	26	15.5	32.5	32	45	144	142	780 331
40	9	36	43	4	28	17	7	27	18	38	36	52	163	161	780 332
50	9	45	47	4	32	21.75	9	35	20.5	46.5	45	65	175	170	780 333
63	9	50	47	6	32	21.75	9	35	23	56.5	50	75	190	185	780 334
80	12	63	61	6	41	27	11	46	23	72	63	95	215	210	780 335
100	14	71	66	6	41	26.5	11	48	28	89	75	115	230	220	780 336
125	16	90	70	7	45	35	13	80	30.5	110	90	140	270	250	780 337

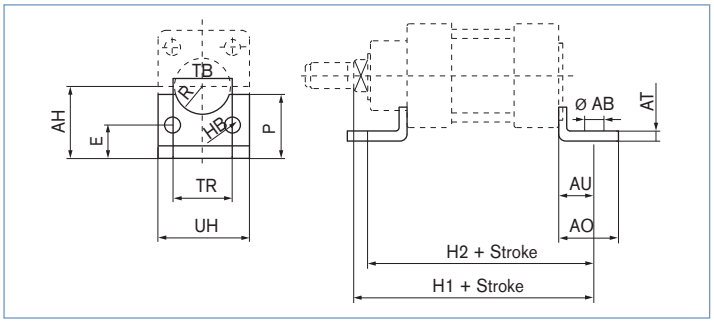

* consisting of 1 angle and 2 fastening screws. Two needed for each cylinder.

Trunnion mounting, aluminium for TZU002*

Ø [mm]	A [mm]	B (h11) [mm]	C [mm]	D [mm]	Ø E [mm]	Ø E1 [mm]	OF (H8h11) [mm]	G [mm]	H [mm]	J [mm]	K [mm]	L [mm]	Item no.
32	46	26	32.5	46	7	12	10	32	5	10	39	10	780 338
40	53	28	38	52	7	12	12	36	5	12	43.5	10	780 339
50	61	32	46.5	64	9	14	12	45	5	12	56.5	11	780 340
63	71	40	56.5	74	9	14	16	50	5	16	64	11	780 341
80	91	50	72	94	11	17	16	63	6.5	16	86	14	780 342
100	111	60	89	113	11	17	20	73	6.5	20	102.5	16	780 343

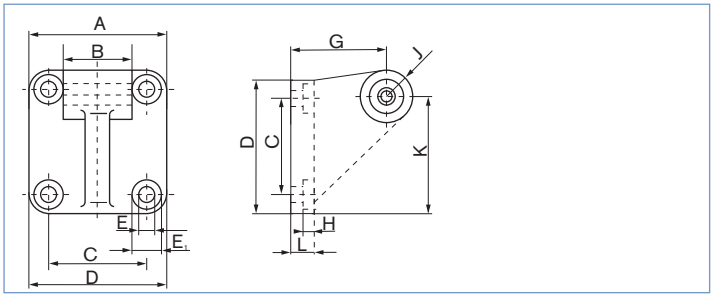

* consisting of 1 swivel flange and 4 fastening screws

DTS 1000111834 EN Version: - Status: RL (released | freigegeben | validé) printed: 18.02.2015

Ordering charts Fastening elements for cylinder Ø 32 to 125 mm

Self-aligning clutch, steel plated for TZU002

For cylinder Ø [mm]	A [mm]	B [mm]	C [mm]	D [mm]	Ø E [mm]	Ø F [mm]	SW1	SW2	SW3	SW4	SW5	Item no.
32	M10 x 1.25	20	23	70	31	21.5	12	30	30	19	17	780 345
40	M12 x 1.25	23	23	67	31	21.5	12	30	30	19	19	780 346
50	M16 x 1.5	40	34	112	45	33.5	19	41	41	30	30	780 347
63	M16 x 1.5	40	34	112	45	33.5	19	41	41	30	30	780 347
80	M20 x 1.5	39	42	122	56	33.5	19	41	41	30	30	780 348
100	M20 x 1.5	39	42	122	56	33.5	19	41	41	30	30	780 348

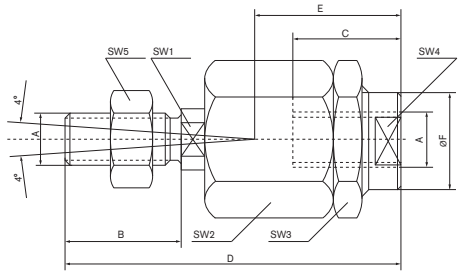

Bearing block with joint bearing, aluminium for TZU002

Ø [mm]	Ø D2 [mm]	H3 + stroke [mm]	H4 [mm]	H6 [mm]	H7 [mm]	H8 [mm]	R [mm]	S1 [mm]	Item no.
32	10	142	12	22	11	10	18	14	780 359
40	12	160	15	25	14	10	21	16	780 360
50	12	170	16	27	15	11	23	16	780 361
63	16	190	21	32	20	11	27	21	780 362
80	16	210	22	36	21	14	29	21	780 363
100	20	230	25	41	24	16	34	25	780 364

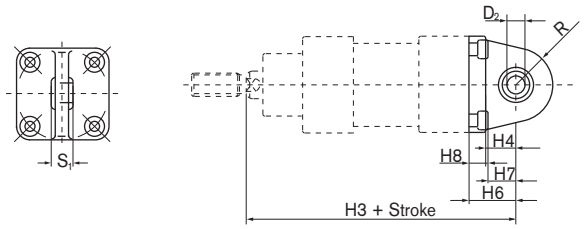

DTS 1000111834 EN Version: - Status: RL (released | freigegeben | validé) printed: 18.02.2015

Ordering charts Fastening elements for cylinder Ø 32 to 125 mm

Joint head, steel plated for TZU002

Ø [mm]	ØP (H7) [mm]	T [mm]	U [mm]	U1 [mm]	V [mm]	W [mm]	W1 [mm]	X [mm]	Z [mm]	ØZ1 [mm]	SW [mm]	Item no.
32	10	15	10.5	14	28	57	20	43	M10 x 1.25	15	17	780 366
40	12	17	12	16	32	66	22	50	M12 x 1.25	17.5	19	780 367
50	16	22	15	21	42	85	28	64	M16 x 1.5	22	22	780 368
63	16	22	15	21	42	85	28	64	M16 x 1.5	22	22	780 368
80	20	26	18	25	50	102	33	77	M20 x 1.5	27.5	32	780 369
100	20	26	18	25	50	102	33	77	M20 x 1.5	27.5	32	780 369
125	30	36	25	37	70	145	51	110	M27 x 2	40	41	780 370

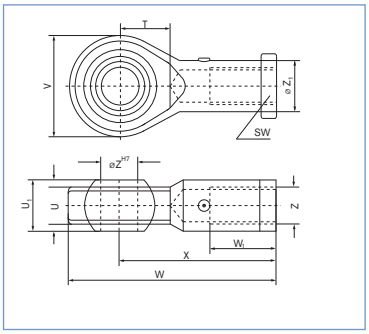

Fork head, steel plated for TZU002

Piston-Ø [mm]	ØP [mm]	T [mm]	U [mm]	V [mm]	W [mm]	X [mm]	Z [mm]	Item no.
32	10	20	10	20	52	40	M10 x 1.25	780 371
40	12	24	12	24	62	48	M12 x 1.25	780 372
50, 63	16	32	16	32	83	64	M16 x 1.5	780 373
80, 100	20	40	20	40	105	80	M20 x 1.5	780 374
125	30	54	30	55	148	100	M27 x 2	780 375

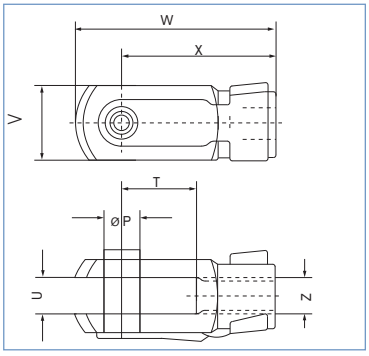

DTS 1000111834 EN Version: - Status: RL (released | freigegeben | validé) printed: 18.02.2015

Ordering chart Fastening elements for cylinder Ø 32 to 125 mm

DIN 439 1014 hex nuts, steel plated for TZU002

Piston-Ø [mm]	A [mm]	C [mm]	Item no.
32	M10 x 1.25	6	780 376
40	M12 x 1.25	7	780 377
50, 63	M16 x 1.5	8	780 378
80, 100	M20 x 1.5	9	780 379
125	M27 x 2	10	780 380

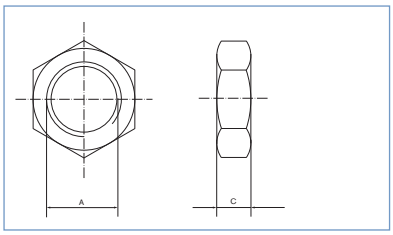

Gasket replacement set for TZU002

Piston-Ø [mm]	Item no.
32	780 381
40	780 382
50	780 383
63	780 384
80	780 385
100	780 386
125	780 387

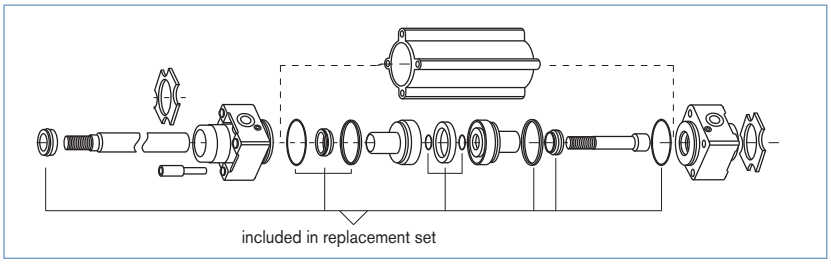

DTS 1000111834 EN Version: - Status: RL (released | freigegeben | validé) printed: 18.02.2015

Ordering chart Fastening elements for cylinder Ø 8 to 25 mm

- Foot fastener
- Flange fastener
- Bearing block
- Fastener and piston arm nuts
- Fork head
- Joint head with spherical bearing

Foot fastening for TZG001/003

Piston-Ø [mm]	A [mm]	B [mm]	C [mm]	D [mm]	G [mm]	H [mm]	J [mm]	R [mm]	S [mm]	Item no.
8 - 10	12	4.5	25	35	11	16	16	10	3	780 753
12 - 16	16	5.5	32	40	14	20	20	13.4	4	780 754
20 - 25	22	6.6	40	54	17	25	25	18	5	780 755

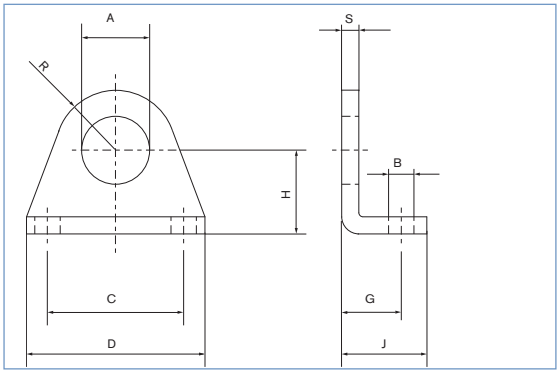

Flange fastening for TZG001/003

Piston-Ø [mm]	A [mm]	B [mm]	C [mm]	R [mm]	R1 [mm]	S [mm]	Item no.
8 - 10	12	4.5	30	15	5	3	780 756
12 - 16	16	5.5	40	15	6	4	780 757
20 - 25	22	6.6	50	20	8	5	780 758

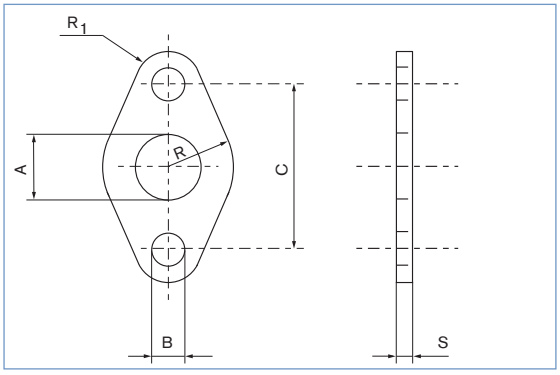

DTS 1000111834 EN Version: - Status: RL (released | freigegeben | validé) printed: 18.02.2015

Ordering charts Fastening elements for cylinder Ø 8 to 25 mm

Bearing block for TZG001/003

Ø [mm]	B [mm]	B1 [mm]	C [mm]	K [mm]	K1 [mm]	H [mm]	L [mm]	M [mm]	N [mm]	O [mm]	R [mm]	S [mm]	Item no.
8 - 10	4.5	4	12.5	-	-	24	22	12.5	8.1	18	5	2.5	780 759
12 - 16	5.5	6	20	-	5	25	35	20	12.1	25	7.5	3	780 760
20 - 25	6.6	8	25	5	-	29	40	23	16.1	32	10	4	780 761

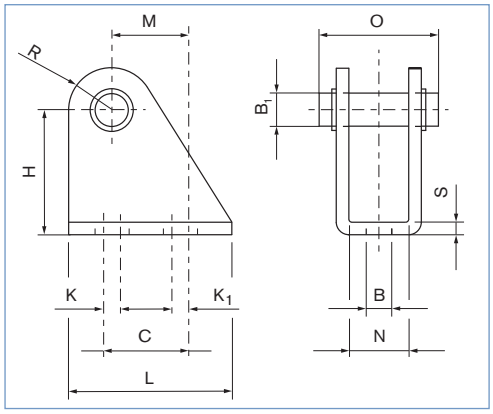

Fastening and piston arm nuts for TZG001/003

Type	Ø [mm]	A [mm]	B [mm]	C [mm]
Fastening nuts	8 - 10	M12 x 1.25	19	6
	12 - 16	M16 x 1.5	22	5
	20	M22 x 1.5	27	8
	25	M22 x 1.5	27	8

Type	Ø [mm]	A [mm]	B [mm]	Item no. set
Piston arm nuts	8 - 10	M4	7	780 765
	12 - 16	M6	10	780 766
	20	M8 x 1.25	13	780 768
	25	M10 x 1.25	17	780 769

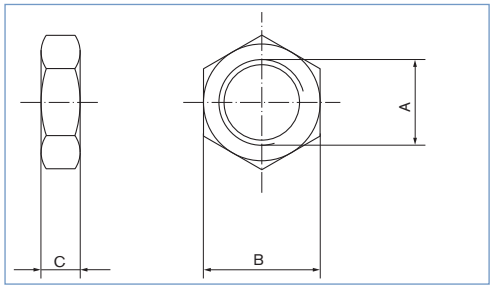

- 1 set consists of 1 fastening nut and one piston arm nut

DTS 1000111834 EN Version: - Status: RL (released | freigegeben | validé) printed: 18.02.2015

Ordering chart Fastening elements for cylinder Ø 8 to 25 mm

Fork head for TZG001/003

Piston-Ø [mm]	P [mm]	T [mm]	U [mm]	V [mm]	W [mm]	X [mm]	Z	Item no.
8 - 10	4	8	4	8	21	16	M4	780 770
12 - 16	6	12	6	12	31	24	M6	780 771
20	8	16	8	16	42	32	M8	780 772
25	10	10	10	20	52	40	M10 x 1.25	780 773

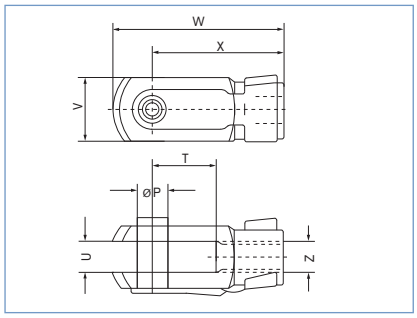

Joint head with spherical bearing for TZG001/003

Piston-Ø [mm]	P [mm]	T [mm]	U [mm]	U1 [mm]	W [mm]	W1 [mm]	X [mm]	Z	Item no.
8 - 10	5	10	6.00	8	36	10	27	M4	780 774
12 - 16	6	11	6.75	9	40	12	30	M6	780 775
20	8	13	9.00	12	48	16	36	M8	780 776
25	10	15	10.5	14	57	20	43	M10	780 777

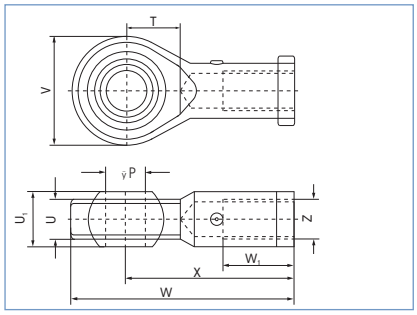

DTS 1000111834 EN Version: - Status: RL (released | freigegeben | validé) printed: 18.02.2015

To find your nearest Burkert facility, click on the orange box → www.burkert.com

In case of special applications,
please consult for advice.

Subject to alterations
© Christian Bürkert GmbH & Co. KG

0810/1_EU-en_00891977